MOUNTAIN SPARK GAPS

NPARC—The Radio Club for the Watchung Mountain Area

Website: http://www.nparc.org
Club Calls: N2XJ, W2FMI
Facebook: New Providence Amateur Radio Club ((NPARC)

VOLUME 52 NO. 12 December 2017

UPCOMING EVENTS

Kids Day
1/7/2018 2:00—5:00 PM
See Inside

Regular Meetings

1/8 & 1/22
Monday 7:30

Meeting Schedule

Regular Meeting: 7:30—9:00 PM
2nd Monday of each month at the
NP Senior & Adult Center
15 East Forth Street
New Providence

Informal Meeting: 7:30—9:00 PM
4th Monday of each month
Same location
Everyone is Welcome
If a normal meeting night is a holiday, we usually meet the following night. Call one of the contacts below or check the web site

Club Officers for 2018

President: W2PTP Paul Wolfmeyer
201-406-6914
Vice President:K2GLS Bob Willis
973-543-2454
Secretary: K2AL: Al Hanzl
908-872-5021
Treasurer: K2YG Dave Barr
908-277-4283
Activities: KA2MPG Brian Lynch
973-738-7322

On the Air Activities

Club Operating Frequency
145.750 MHz FM Simplex

Sunday Night Phone Net
Murray Hill Repeater (W2LI) at 9:00 PM
Transmit on 147.855 MHz
With PL tone of 141.3 Hz
Receive on 147.255 MHz
Net Control K2AL

Digital Net
First & Third Mondays 9 PM
28,084 — 28,086
Will be using PSK and RTTY
Net control K2YG

Club Internet Address

Website: http://www.nparc.org
Webmaster KC2WUF David Bean
Reflector: nparc@mailman.qth.net
Contact K2UI, Jim

MOUNTAIN SPARK GAPS

Published Monthly by NPARC, Inc.
The Watchung Mountain Area Radio Club
P.O. Box 813
New Providence, NJ 07974

Editor: K2EZR Frank McAneny
Contributing Editors:
WB2QOQ Rick Anderson
W2PTP Paul Wolfmeyer
K2UI Jim Stekas

Climatological Data for New Providence for November 2017

The following information is provided by Rick, WB2QOQ, who has been recording daily weather events at his station for the past 36 years.

TEMPERATURE -
Maximum temperature this November, 72 deg. F (November 3)
Last November(2016) maximum was 70 deg. F.
Average Maximum temperature this November, 52.0 deg. F
Minimum temperature this November, 20 deg. F (November 11)
Last November(2016) minimum was 28 deg. F.
Average Minimum temperature this November, 33.8 deg. F
Minimum diurnal temperature range, 11 deg. (59-48) 11/5
Maximum diurnal temperature range, 26 deg. (48-22) 11/10

Average temperature this November, 42.9 deg. F
Average temperature last November, 46.2 deg. F

PRECIPITATION -
Total precipitation this November - 1.67" rain
Total precipitation last November - 4.51" rain

Maximum one day precip. event this November -
November 7, 0.67" rain
Measurable rain fell on 13 days this November, 7 days last November.

YTD Precipitation - 43.24" (includes rain + melted snow; 22.25" snow as of 3/31/17)

==========

Rick Anderson
12/5/17
243 Mountain Ave.
New Providence, NJ
(908)464-8911
rick243@comcast.net

Lat = 40 degrees, 41.7 minutes North
Long = 74 degrees, 23.4 minutes West
Elevation: 380 ft.
CoCoRaHS Network Station #NJ-UN-10

Kid's Day

The DeCorso center where we usually met will not be available on 1/7/18 as planned. However we can use the Berkeley Heights recre ation facility which we used a few years ago.
It is located on Park Avenue just off of Plainfield Avenue (same building as Municipal Offices and Police Department). There is plenty of parking and rest rooms are available.

Setup will begin at noon and operation will run from 2PM till 5PM unless we run out of kid (or energy) earlier.

Be there early if you expect to get warm Pizza.

President's Column December 2017

It was great to see over thirty members and guests at our holiday luncheon. Thanks to James Kern, KB2FCV, for the arrangements. Congratulations to the award recipients: Jim Stekas, W2UI, received and prominently displays (as required) the Wouff Hong award; besides frequent intriguing programs and regular contributions to the Spark Gap, Jim has been a dedicated helpful club member. Our Ham of the Year is Billy Malone, KD2JRI, who has jumped into hamming with both feet—now holding his Amateur Extra, involved as a VE, a life member of ARRL, and active in the community. Our Rookie of the Year is Phil Gengler, KC2ONL, who has gone from Technician to Extra this year, been active in Field Day (particularly with digital), and contributed to the Great Eclipse Program with his experiences travelling to Oregon. Again congrats to all three.

So what's next? Kids Day, SUNDAY January 7 at the Berkeley Heights Rec Center (I reported an incorrect date in my last column—sorry.) Come on out, many hands make the session easier.

Then the auction comes on SATURDAY February 24th in the afternoon at the New Providence High School. We'll be planning for it at our January 8th NPARC meeting.

And we have the Fox Hunt coming in May—we need to get prepared.

Our officer team continues into 2018 with the exception of David Hartman, AC2GL, our Activities Manager. Thanks for your work this year Dave. Brian Lynch, KA2MPG, was elected as the new Activities Manager.

In other matters, I've continued my pursuit of FT8! I'm up to 49 confirmed states, missing only Alaska. And the country count is about 35 with 25 confirmed. Give it a try!!

I've also been putting together the ZZRX-40 Receiver from Craig Johnson, AA0ZZ, and packaged by the 4 States QRP group. The small capacitors had no markings that I could see, so the tester from our club project was a great help in identifying the correct values! (It's paid for itself already—thanks Jon!)

Best wishes to you and yours for 2018.

73 for now

Wolf

W2PTP

Direct Sampling SDR Receiver : A/D

Jim Stekas - K2UI

Back in the early 1990's a sound card would cost you about $100-200. For that money you could sample CD-format audio: two channels of 16-bit samples at 44,100 samples per second. Today you can buy an SDR board like the SDRplay RSP2 that will digitize a 10MHz chunk of the HF spectrum for the same price. We are now processing RF with the ease we once processed AF.

Icom took advantage of the price performance benefits of SDR in the IC-7300, which is roughly equivalent to an IC-756 ProII with the analog RF and IF blocks replaced by digital processing blocks. The IC-7300 receiver (block diagram below) is essentially an SSB receiver using the phasing approach, but implemented in DSP.

• FPGA BLOCK DIAGRAM (Receive circuits)

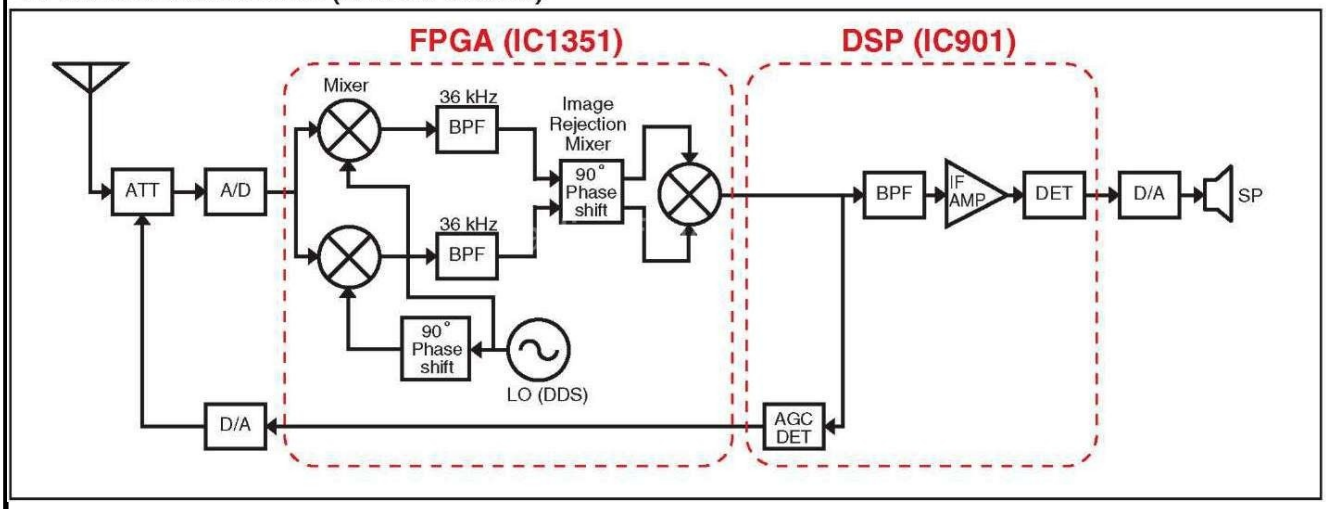

The above diagram (taken from the IC-7300 Service Manual) shows the antenna signals going through a programmable attenuator (ATT) directly into the A/D. This is a simplified view. Schematics show that the ATT block also contains bandpass filters and an RF amplifier. Icom provides no part number or specs for the A/D so for the purposes of discussion we will assume it produces 16-bit samples at 124 Msps (a number that is probably wrong that I got off the net.)

A 16-bit A/D can put out values from -32768 to +32767. The highest power signal that can come out of the A/D is a “full scale” square wave that alternates between -32768 to +32767 and has an RMS power of 32768. A signal at this maximum power is said to be “zero decibels full scale” or 0 dBFS.

The smallest square wave signal we can see out of the A/D varies from -1 to +1, which has an RMS power of 1, which translates into -90 dBFS. The difference between minimum and full scale RMS power levels gives a dynamic range (DR) 90 dB for the A/D.

Since A/D output can only have integer values, the loss of the fractional parts of the input signal adds “quantization” noise. The truncated fractional parts will have values uniformly distributed between -1/2 and +1/2, which corresponds to quantization noise level of -96 dBFS.

A simple way to test the sensitivity of an analog HF receiver is to look for a rise in the noise when an antenna is connected. (Why doesn't this work at VHF?) The same applies to an SDR receiver. To achieve maximum sensitivity we need to have enough amplification in our RF front end for the noise background to be present at the output of the A/D. A reasonable operating point is to set the RF gain for an RMS noise level out of the A/D of approximately 2. This corresponds to -84 dBFS, which puts the RF noise floor 12 dB above the quantization noise. Higher gain settings use more A/D bits to provide a higher resolution of the noise at the expense of reduced dynamic range.

Very strong signals can have peaks beyond the full scale limits of the A/D resulting in clipping. Unlike the gain compression suffered by analog amplifiers, clipping is a catastrophic condition that causes performance to fall off a cliff. This means that automatic gain control (AGC) is even more critical in SDR than in analog receivers. The AGC loop shown in the IC-7300 block diagram is definitely the wrong way to implement AGC in a direct sampling SDR receiver. The reason is that the A/D is digitizing the entire spectrum from 0-30MHz and the AGC is being derived from a tiny 36kHz slice of the total spectrum around the receive frequency. (My guess is this is an error in the figure and not the actual receiver.)

The right way to implement AGC in a direct sampling receiver is to measure the power into (or out of) the A/D and apply AGC to keep the A/D from being driven to full scale. Since it is signal peaks that cause clipping, the AGC needs to account for the difference between peak and RMS power, usually expressed as the “peak-to-average power ratio”, or PAPR. The PAPR of a RTTY signal is 3dB while a band full of RTTY signals will look more like Gaussian noise which has an infinite PAPR! For practical purposes we will assume the PAPR of the entire 0-30MHz spectrum to be about 15 dB. Clipping is impossible to eliminate completely, but if we set our AGC to keep the A/D output below -15 dBFS we should be able keep clipping under control (i.e. less than 1% worst case).

Setting the AGC to keep levels below -15 dBFS reduces the DR to 69 dB (84 - 15 dB). So how is it that we estimate a DR of 69 dB when Icom's IC-7300 specs show a DR of 103 dB? The answer is that 69 dB is a rough estimate of the DR for ***receiving the full 30 MHz HF spectrum***. The Icom specs apply to SSB signals 2400 Hz wide which is 12500 times narrower than 30 MHz and therefore contains 41 dB less noise. This lowers the effective noise floor and raises the DR to 110 dB (69+41) for narrow band ham radio signals.

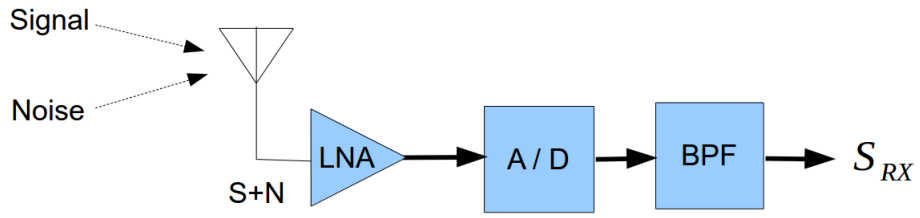

Above is a simplified diagram of the front end of a direct sampling SDR receiver. We consider the case where the LNA (Low Noise Amplifier) gain is set to produce a noise level of 2 RMS (-84 dBFS) and we are tuned to a CW signal with with a peak-to-peak level of 1 (0.35 RMS = -99 dBFS).

The top plot below shows the CW signal which would produce a flat ADC output of zero in the absence of noise. The middle plot shows the noise that accompanies the signal in from the antenna.

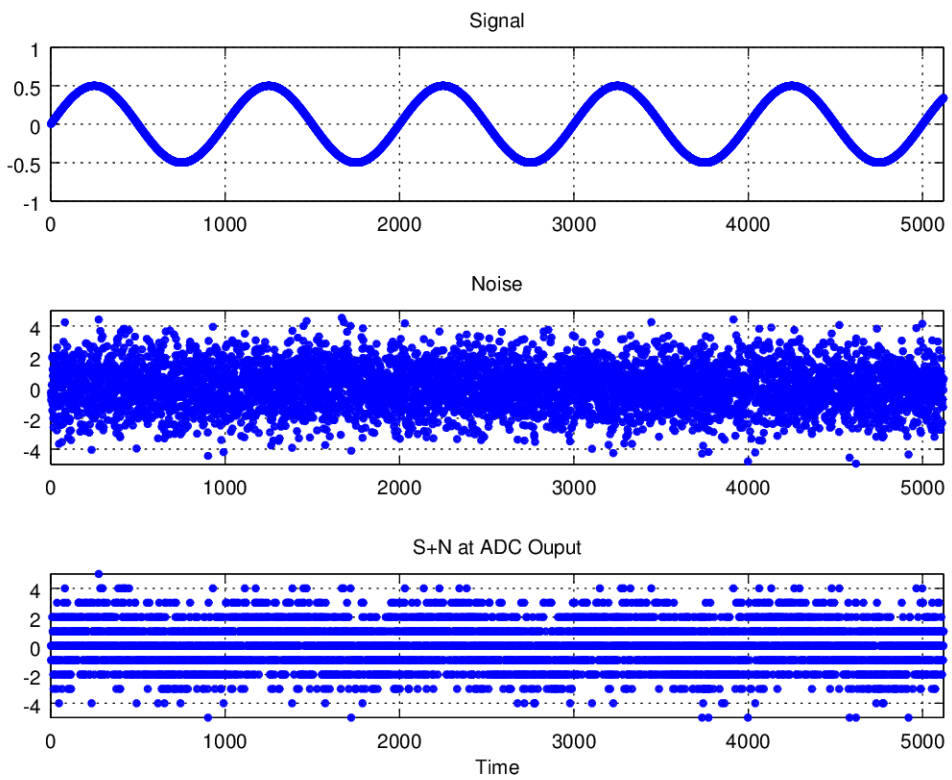

The bottom plot shows the ADC output of the signal plus noise. Notice the quantization to integer values and also how the signal has shifted the noise up and down a small but visible amount. Oddly, the noise has has provided a way for the signal to make its way through the A/D. (In systems where no noise is present, pseudo-noise is injected into the A/D input to “dither” weak signals and make them detectable.)

Passing the A/D output through a 36 kHz band pass filter (BPF) removes the out-of-channel noise and recovers the signal. The plot below compares the transmitted signal (TX) with the received signal (RX). Starting with a signal 15 dB below the noise floor at the antenna we have ended up with a received signal with healthy SNR.

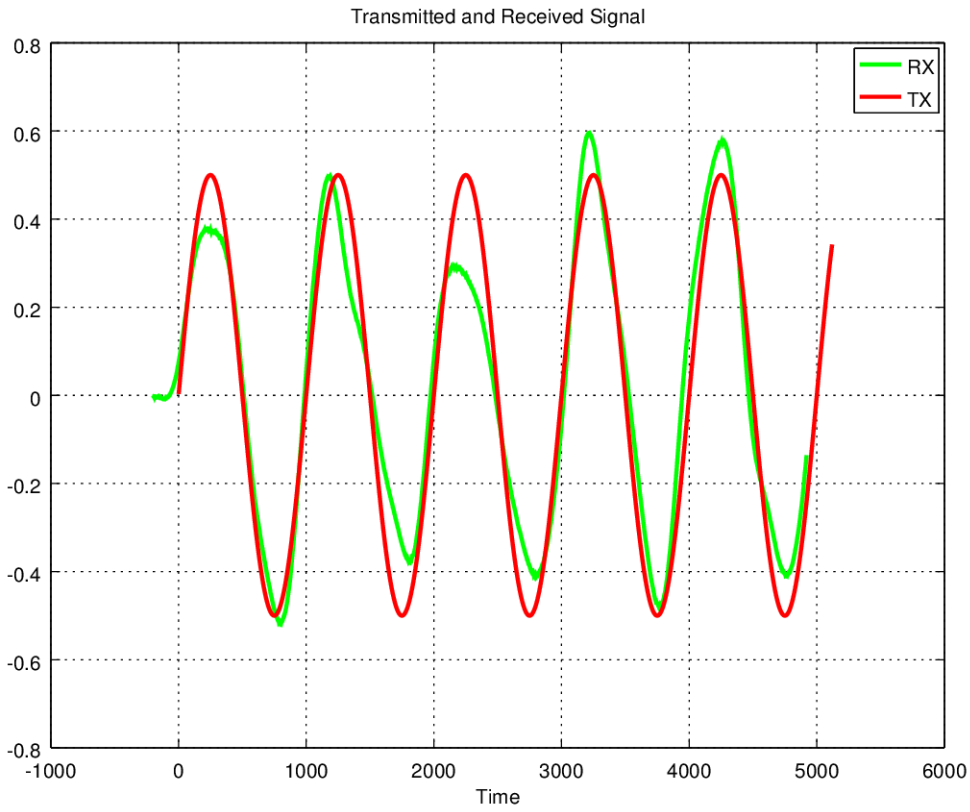

Note we have adjusted our LNA gain so that external atmospheric and galactic noise from the antenna came out of the A/D at an RMS level of 2. External noise at HF is 10 to 15 dB above the internal thermal noise level. If we put our receiver on the test bench and injected the same peak-to-peak signal CW signal we wouldn't see it at all because we wouldn't get the benefit of dithering by the external noise at the antenna input. We would have to increase the LNA gain to raise the thermal noise to the same level as the external noise to have the same sensitivity. Optimizing HF SDR receiver settings for the bench will give sub-optimal performance over-the-air, and vice-versa.

For many years Sherwood (www.sherweng.com/table.html) reported that FlexRadios had a higher DR with the preamp on than off, which is precisely opposite to what happens on every other radio. The explanation for this is that turning on the preamplifier replaced the external noise from the antenna and restored the weak signal sensitivity.